E010

Z010

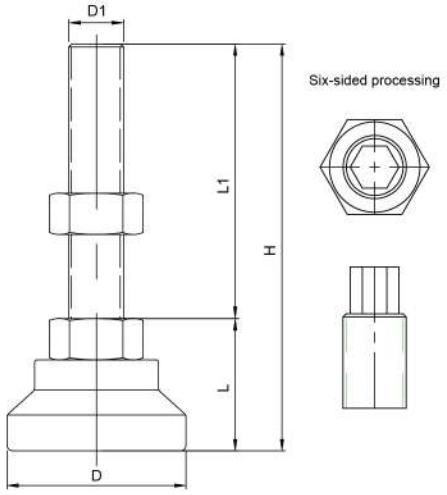

***Rubber resistivity < 50KΩ.**
***One-piece aluminum alloy mount.**
***Polished and chrome plated surface, very conductive.**
***Applicable for clean rooms, aluminum extrusion equipment, and heavy equipment.**
***A six-sided process thread is acceptable.**

Item Number	Screw Material	Plate Diameter D mm	Plate High L mm	Screw Specification D1 mm	Screw Length L1 mm	Total High H mm	Load Capacity Kg
E010-90-16-100	SUS304 Stainless	90	54	M16*P2.0	100	154	800
E010-90-16-150			54	M16*P2.0	150	204	800
E010-90-16-200			54	M16*P2.0	200	254	800
E010-90-20-100			58	M20*P2.5	100	158	950
E010-90-20-150			58	M20*P2.5	150	208	950
E010-90-20-200			58	M20*P2.5	200	258	950
Z010-90-16-100	SS41 Zinc	90	52	M16*P2.0	100	152	800
Z010-90-16-150			52	M16*P2.0	150	202	800
Z010-90-16-200			52	M16*P2.0	200	252	800
Z010-90-20-100			53	M20*P2.5	100	153	950
Z010-90-20-150			53	M20*P2.5	150	203	950
Z010-90-20-200			53	M20*P2.5	200	253	950
Z010-90-24-100			60	M24*P3.0	100	160	1100
Z010-90-24-150			60	M24*P3.0	150	210	1100
Z010-90-24-200			60	M24*P3.0	200	260	1100
Z010-90-30-100			62	M30*P3.5	100	162	1100
Z010-90-30-150			62	M30*P3.5	150	212	1100
Z010-120-20-100		120	50	M20*P2.5	100	150	1000
Z010-120-20-150			50	M20*P2.5	150	200	1000
Z010-120-20-200			50	M20*P2.5	200	250	1000
Z010-120-24-100			57	M24*P3.0	100	157	1100
Z010-120-24-150			57	M24*P3.0	150	207	1100
Z010-120-24-200			57	M24*P3.0	200	257	1100
Z010-120-30-100			59	M30*P3.5	100	159	1200
Z010-120-30-150			59	M30*P3.5	150	209	1200
Z010-120-36-100			59	M36*P4.0	100	159	1200
Z010-120-36-150			59	M36*P4.0	150	209	1200